INSTRUMENTS

Gas Detection For Life

RKI INSTRUMENTS, INC.
INSTRUCTION MANUAL

For
RIKEN'S HIGHLY SENSITIVE TOXIC GAS MONITOR

Model F P- 300

The accompanying instrument is sold and serviced in USA by RKI Instruments Inc. Please contact RKI Instruments for any follow up service needs, including questions, warranty issues, repairs, and spare parts and sensors. Thank you for selecting this fine instrument for your use. With proper care and maintenance, it will provide you with many years of reliable service.

RKI Instruments, Inc. 33248 Central Avenue Union City CA 94587 • Phone (510) 441-5656 • (800) 754-5165 • Fax (510) 441-5650
World Leader In Gas Detection & Sensor Technology
www.rkiinstruments.com

1. In the beginning

This is important manual to operate the gas monitor FP-300 to keep the performance of the unit, to increase the reliability of the unit. The record of the checking result and the treatment of this should be kept and use them for next checking, planning for repair and improvement of the equipment. It is kindly requested to keep the safety enough consideration at instruction even when the work failure or accidents etc takes place by inadvertent factors and disconnection of power and signal cables.

・Identification of each cautionary marks

⚠DANGER

This mark means that it may occur serious damage on the human' s life or products if the unit is used in improper way.

⚠WARNING

This mark means that it may occur serious damage on human' s body or products if the unit is used in improper way.

⚠CAUTION

This mark means that it may occur some damage on the body or products if the unit is used in improper way.

＊NOTE

This mark means the advice on the operation/control of the unit.

2. Product function

2-1 Accessory list

This unit is accessory with the following and then check them when received.

- Cassette tape : 1 pce
- Dust filter : 1 pce
- Instruction manual : 1 pce
- Fuse : 2 pcs

2-2 Block diagram

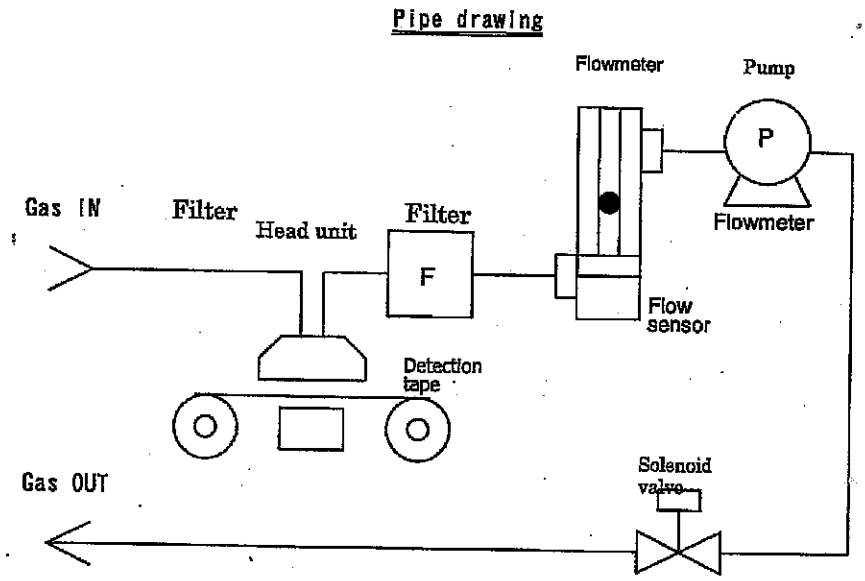

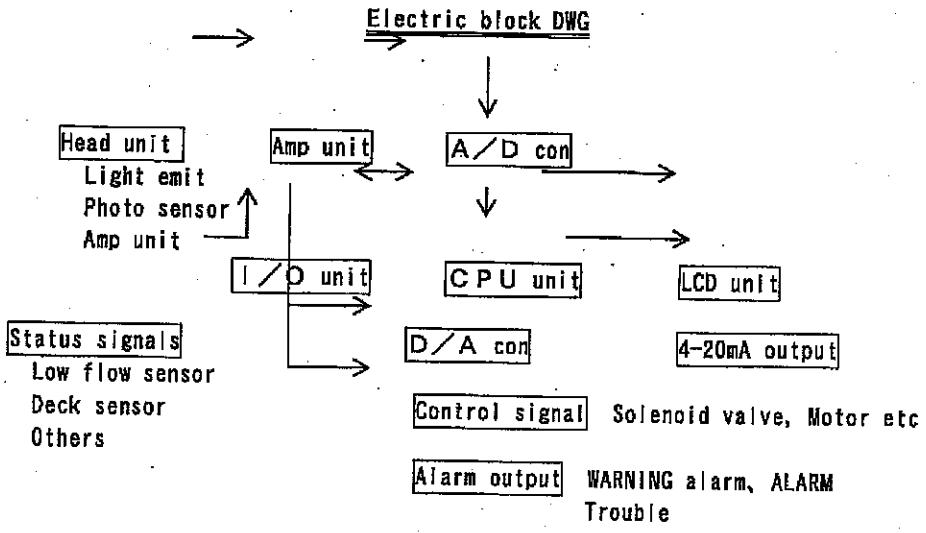

2-3 Drawing

Desk top type

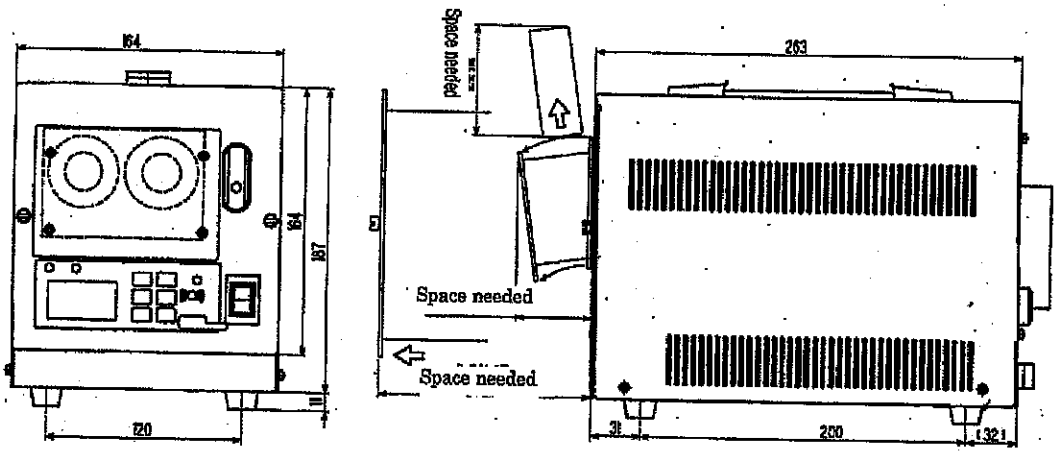

Panel mount type (TYPE-P)

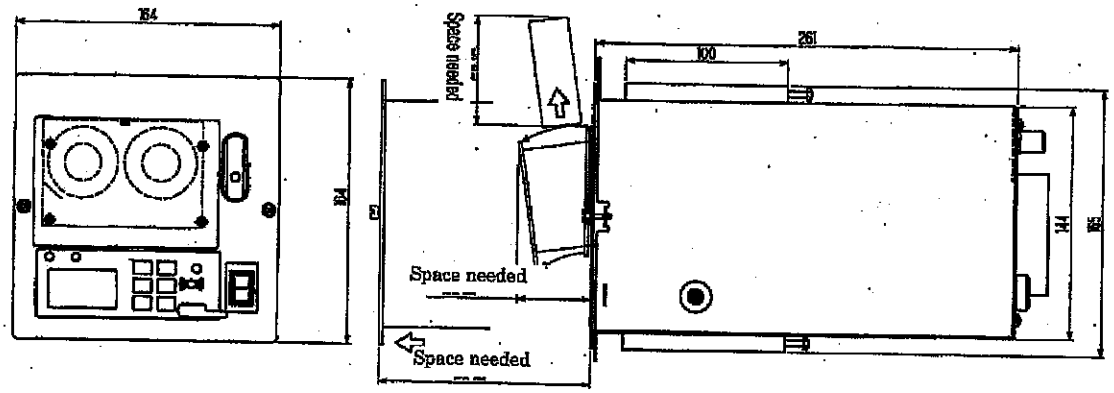

2-4 Each name designation

2-4-1 Surface panel part

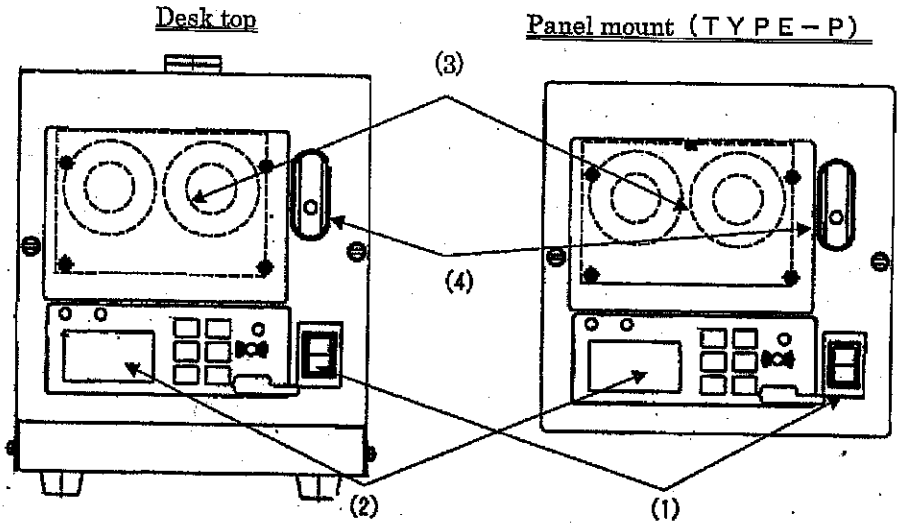

(1) POWER switch : Power ON/OFF
(2) Operation panel : Operate each and display. See 【2-4-3 Ope panel】.
(3) Cassette tray : Set the gas detection tape.
(4) Flow monitor : Check the flow rate of sample gas.

2-4-2 Rear panel

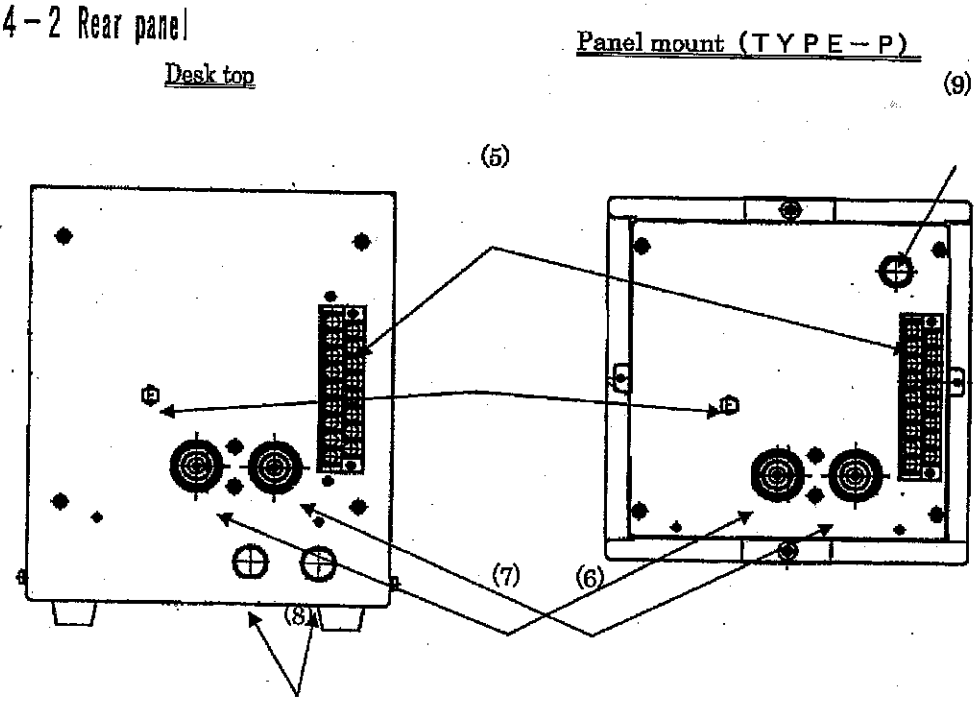

(5) External terminal : See 3-3-2 terminal dwg】
(6) Gas In half union : (Connect the Teflon tube φ6mm)

(7)Gas out half union : (Connect diaϕ 6mm Teflon tube)
(8)Fuse : 2A×2 pce
(9)Partial exhaust port : Dia ϕ1/2 inch pipe

2-4-3 Panel part

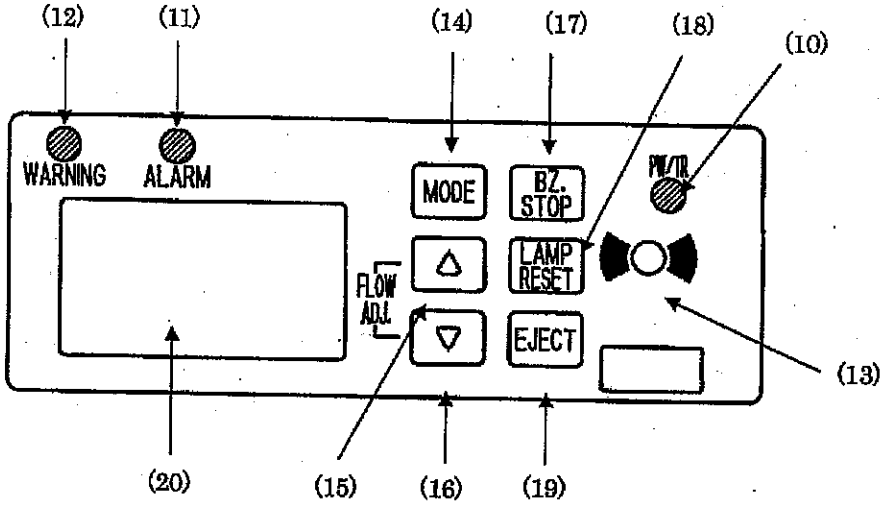

(10) POWER/TROUBLE lamp : Normal (Gas status) --- Green light on
Trouble ..... Green lamp blinking

(11) ALARM lamp (Alarm) : Red lamp
Lit out at gas detection.
When trigger alarm, it blinks or lights on.

(12) WARNING lamp (Warning) : Orange lamp
Light out at gas detection on.
When trigger alarm, it blinks or lights on.

(13) Buzzer : Alarm ..... Continuous tone (Pi)
Warning ..... Intermittent tone (Pi, Pi,)
Switch on ..... Single tone (Pi)

(14) MODE switch : When press approx 3 sec at gas detection, it gets maintenance mode and can make alarm test etc.

(15) △ (UP) switch : · When press this switch at gas detection, the flow will go up.
· When this switch is pressed, mode can be selected.

(16) ▽ (DOWN) switch : · When press this switch at gas detection, the flow will go up.
· When press this switch at maintenance status, the mode can be selected.

(17) BZ STOPスイッチ : When press BZ STOP switch at gas detection status, the buzzer stops sounding and alarm lamps(11), (12) shall be changed from blinking to light on.

(18) LAMP RESET switch : · After press BZ STOPスイッチ (17) at gas alarm status, press LAMP RESET switch at gas alarm. When it gets lower than alarm preset level, the alarm lamp(11), (12) will light out, the external alarm will be cancelled.
· When it gets to plural trouble status, the trouble can be checked in turn by pressing this switch.
See 【7－1 Self diagnosis function】
· When pressed at gas detection status, the alarm set value shall be displayed on L C D (20) for approx 2 sec.

(19) EJECT switch : When unload the cassette tape, hold and press this switch for approx 2 sec and then, the cassette tray will open.

(20) LCD : This shall show various comment such as gas reading.

3. Operation

3-1 Handling

① For panel mount type, there is no handle. Then carry it with hands on to the bottom.

② When install this unit, take caution to install where alarm can be checked easily, the reading is easy to see, the cassette tape is easy to replace, flow can easily be adjusted and it is easy to maintain.

③ Do not install the following places where it will be cause for trouble and accident.

- Place where sun-drought is given.
- Place where to be plenty of dust and full of humidity.
- Place where direct wind is given.
- Place where to be many of vibration.
- Place where to be on unstable stool or slant.
- Place where to be outdoor or plenty of water drops.

④ As this unit is composed of precision electronics parts, do not drop and crush and in stall where it is safe and horizontal.

⑤ Keep it from the noise source where to be near from high capacity transducer, high no ise of motor power source and high voltage generator.

⑥ To prevent the error of operation by electric radio interference, keep it at over 1m away from the walky-talky and hand-phone or mobile.

3-2 Piping

① The piping between both IN/OUT should be within MAX. 20m.
② The piping material should be used with a Teflon tube of ϕ 6 mm.
③ For OUT side pipe, discharge to the given exhaust duct.
④ For GAS IN side, mount it by the accessory filter.

3-3 Wiring

3-3-1 Caution items

① The signal wire of current output should be used in the condition not to be affected by the noise through the shielded cable(CVVS cable etc).

② Wiring work should be used by switching OFF (O side) if it should be done under power charge condition, it may damage the unit by short circuit etc.

3-3-2 Terminal drawing

① AC100V(L)／DC24V(+) ┐ Power input
② AC100V(N)／GND (−) ┘
③ アース

④ 4-20mA (+) ┐ Power output
⑤ 4-20mA (−) ┘
⑥ No use
⑦ No use
⑧ No use

⑨ COM ┐
⑩ a ├ WARNING Alarm output
⑪ b ┘
⑫ COM ┐
⑬ a ├ ALARM Output
⑭ b ┘
⑮ COM ┐
⑯ a ├ Trouble contact output
⑰ b ┘

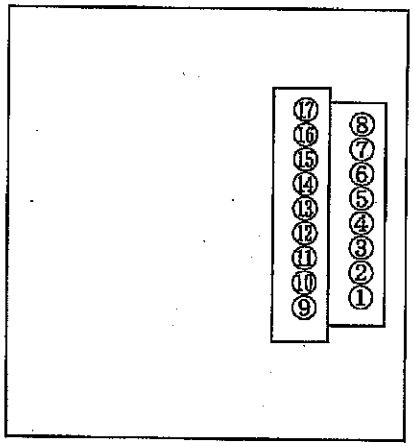

• Power input
Desk top : AC100V
Panel mount : DC24V (Check the polarity)

• Power output : 4-20mA (Take care of polarity)

Output 0～F.S. at linearity

0	:	4 mA
F.S.	:	20 mA
Trouble	:	0.5 mA
Initial	:	2.5 mA

For gas exceeding F.S, it indicates up to the output of 22mA.

The rating of alarm point each is 125V, 0.5A. It may have the case to need the protection spares such as spark killer by the connection load to keep the function.

3-4 Gas detection cassette tape

This gas detection cassette tape (FC TYPE) is for exclusive cassette tape.
Use it by understanding all the below.

3-4-1 Handling of gas detection cassette

Special reagent is applied for detection tape and then, though it is not harmful to human, do not touch by hand. Because it may cause drop of detectability and the cut-out of tape.

The operation time of cassette tape is one month and then, the tape passing over 1 month after opening cannot warrant the indication accuracy from the safety.

To grasp the replacement date of the detection tape, be sure to put the date of operation on the cassette tape.

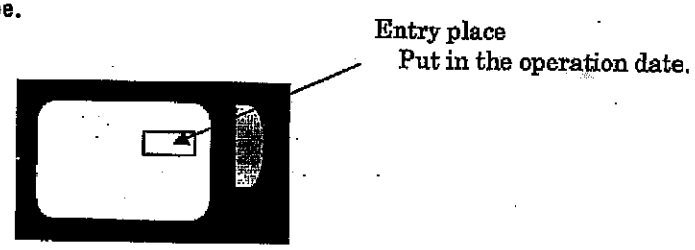

The cassette tape is different from the measuring gas, check the model of it first and use it.

If the different model of cassette tape is used, it is impossible to detect the gas. Then, the cassette tape model name is displayed on LCD while the cassette loading tray is open.

- The replacement frequency of cassette tape is 31 days under the condition that sample gas is free. If the sample gas is detected and the tape will go on faster. T hen this replacement frequency is shorter.
  Then, the tape will be consumed if unloading on the way or turn on the power on/off. Use the new cassette tape as long as it can and then, use it up to the end.
- When repeatedly unload the cassette tape on the way, the accuracy of tape reminder accuracy will be inaccurate.
- When the reminder date display shows 2 days, the message [CHANGE TAPE] will be shown. POWER/TROUBLE lamp will flicker and the replacement of cassette tape will be blinking and expedite the replacement of the cassette tape.
  If the cassette tape is empty completely, it will show [TAPE END] and as the gas detection is stopped to operate and replace the tape immediately.
- When load the cassette tape on the unit, see [6 — 4 Replacement method of detecti on cassette tape] when replace.

The gas detection cassette tape is for exclusive use(FC type) of unit
Do not load it to the other unit and not use it by turning back the tape.

When turn the tape winding part by hand, do not give the force more than the required or strain the tape strongly. Do not wind the winding part basically.

3-4-2 Gas detection tape cassette

The detection tape is so delicate. If do not handle with care, the capability of tape will be lost and then, the accurate detection will not be available.
After having understood the following, store the detection tape.

For the cassette tape which once opened, put it back into the pack and store it in th e refrigerator. When one month has passed, do not use it because the given function of th at tape may not maintain the original function due to the deterioration.

- The gas detection tape must be used up in the storage period printed in the pack. If the detection tape has passed the storage period, it will be deteriorated and cannot maintain the original function.
- If stored after opening the pack and leave it with loading the cassette tape in the unit, the discolor of tape may take place and the original function of tape could not be maintained. Then, after opening, use it up at earliest.

3-4-3 Return of gas detection tape

For outer cassette cape used up, it is kindly requested to return back for recycling the natural resources.

4. Operation method

4-1 Preparation

4-1-1 Check item

・Pipe : Check whether the given items are not wrong(Pipe material, length)
See 【3－2 Piping】.

・Pipe : Check whether the connection with external output is correct or not.
See 【3－3 Wiring】.

4-1-2 Power input

After having understood the below, turn on the power.

・ Check that the power switch is OFF side (O side).
・ Check that the power source is adjusted with the power displayed on the unit.

・Use the power source by keeping it away from the high consumption of motor and high power source.

・ Do not make multi-wire connection.

Arrange not to damage the power cord. Do not bend the power cord or hook or pull out forcibly.

4-1-3 Power ON

Change over the power switch from OFF(0 side) to ON side(1 side).
After power on, this comes to the detection condition.

4-1-4 Loading of detection cassette tape

Put in the detection cassette tape suited for the model to the detection gas.
Check the detection tape and tape model.
In detail, see 【6-4 Replacement of gas detection tape】. After loading it, (after closing the cassette tray), it will be in detection condition in a minute.

4-1-5 Flow adjustment

Check the sample gas flow rate. If the flow meter ball is out of range, see 【6-3 Sample gas and flow adjustment】 and adjust it.

4－2 Operation

When make the power switch ON (1 side), it will proceed to the detection condition after displaying the necessary information and mechanical check.

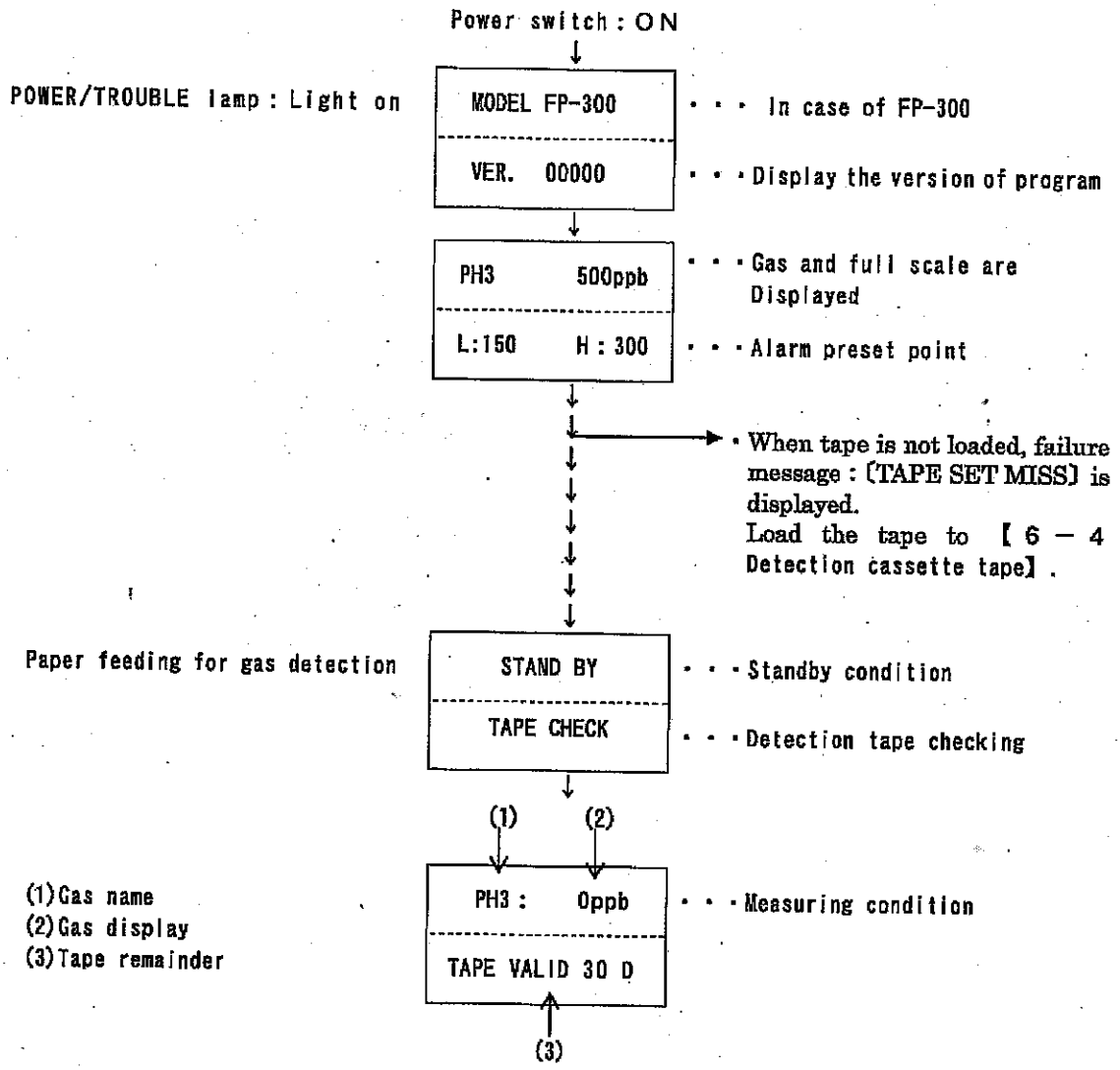

4－3 Simple check for gas alarm preset point

When press LAMP RESET switch of the front panel on the measuring condition, the alarm point shall be displayed as follows.

However, the normal measuring condition means the condition in which gas alarm and trouble alarm do not trigger.

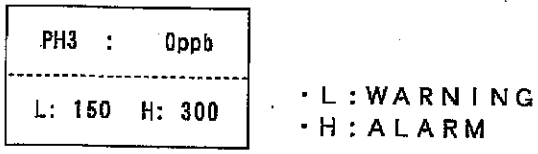

5. Each function

5-1 LCD display

5-1-1 Display format

LCD The display is formatted by the following.

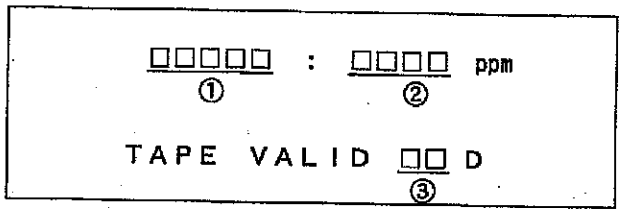

① Gas name is displayed as follows. ····· Example) PH_3
② Gas density is displayed. ····· Displayed by ppm, ppb unit
③ Display the remainder of detection tape.

5-1-2 Gas density display

The display of this gas density has the following feature.

- For gas density, the figure at each detection cycle is updated at each cycle.
- For gas density, it will be the average within the time of detection cycle.
- For gas display, the detection figure at previous detection cycle is outputted.

The following drawing is the timing chart at the case of change with elapsed time.

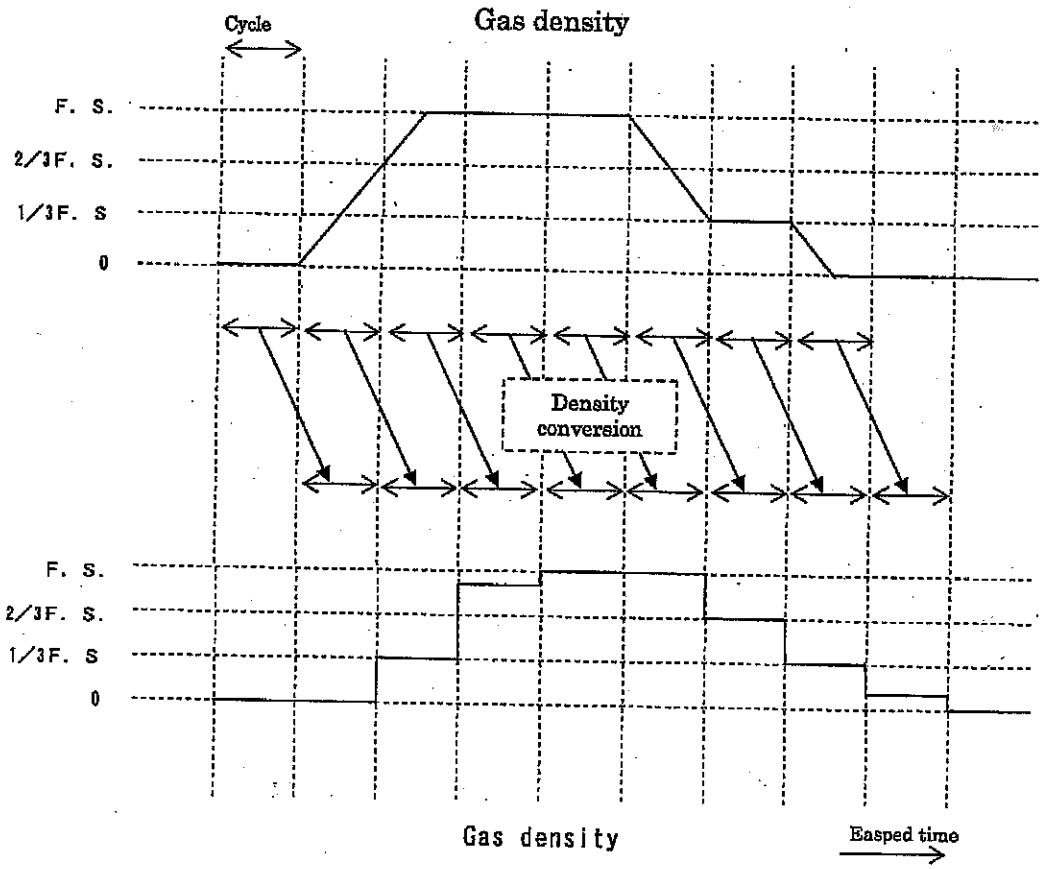

5-2 Alarm function

5-2-1 Gas alarm

This unit is designed to detect the level of discolor by being exposed to the detecti on tape containing the special reagent within a unit of time. Namely, if a unit of time(detection cycle has not passed, the accurate gas detection is not available. On the other hand, when high density gas is generated, it is required to trigger alarm at the earliest.

The alarm activation of this unit is based on the following figure, the rapid measures are available.

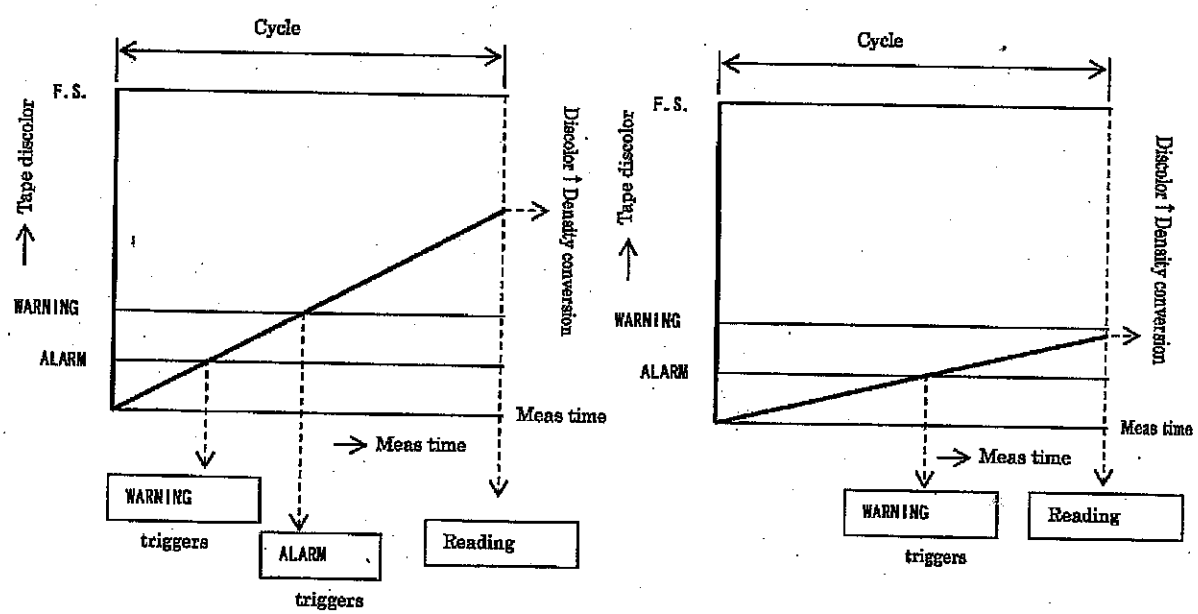

5-2-2. Alarm performance

Timing chart

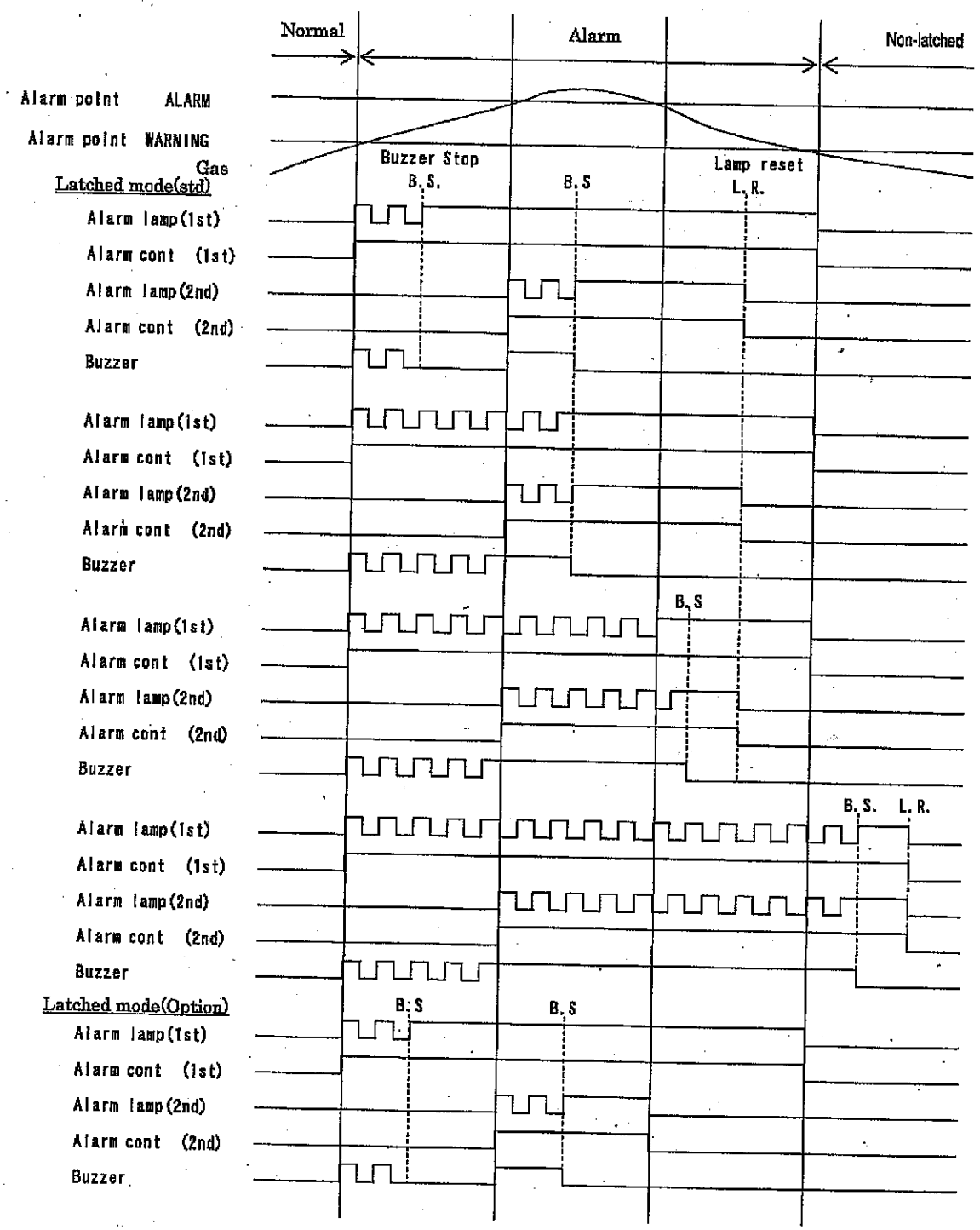

5-3 External output

5-3-1 Output contact

This output contact will be non-latched mode after pushing the reset switch.

WARNING Contact output : Dry c contact, Rating : AC 125V, 0.5A (Resistive load)
ALARM Contact output : Dry c contact, Rating : AC 125V, 0.5A (Resistive load)
Trouble alarm Contact output : Dry c contact, Rating : AC 125V, 0.5A (Resistive load)

The connection to terminal proceeds as follows.

a contact (NO) case

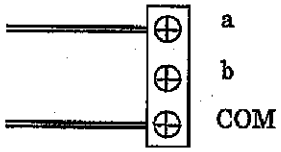

b contact (NC) case

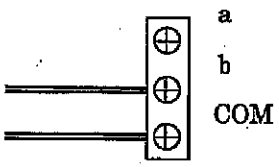

Alarm contact is used as signal transmission media to activate the buzzer alarm rotation light. Do not use it for control purpose such as shutting off etc.

When control the external load, it may have the case to give the evil influence to the gas detector by load characteristic. In such case, let it make the performance stable and to protect the contact, it is requested to proceed to the following procedure.

- Mount and use CR circuit(Spark killer :SK) suited for relay coli by relaying via low voltage relay.
  (In case of DC case, use it by mounting diode etc to the relay.
- Mount CR circuit to the load side of relay relayed on request.

5-3-2 4-20mA output

This unit is provided with 4-20mA suited for LCD reading display.
The following is a timing chart for 4-20mA whenever the gas density is changed.

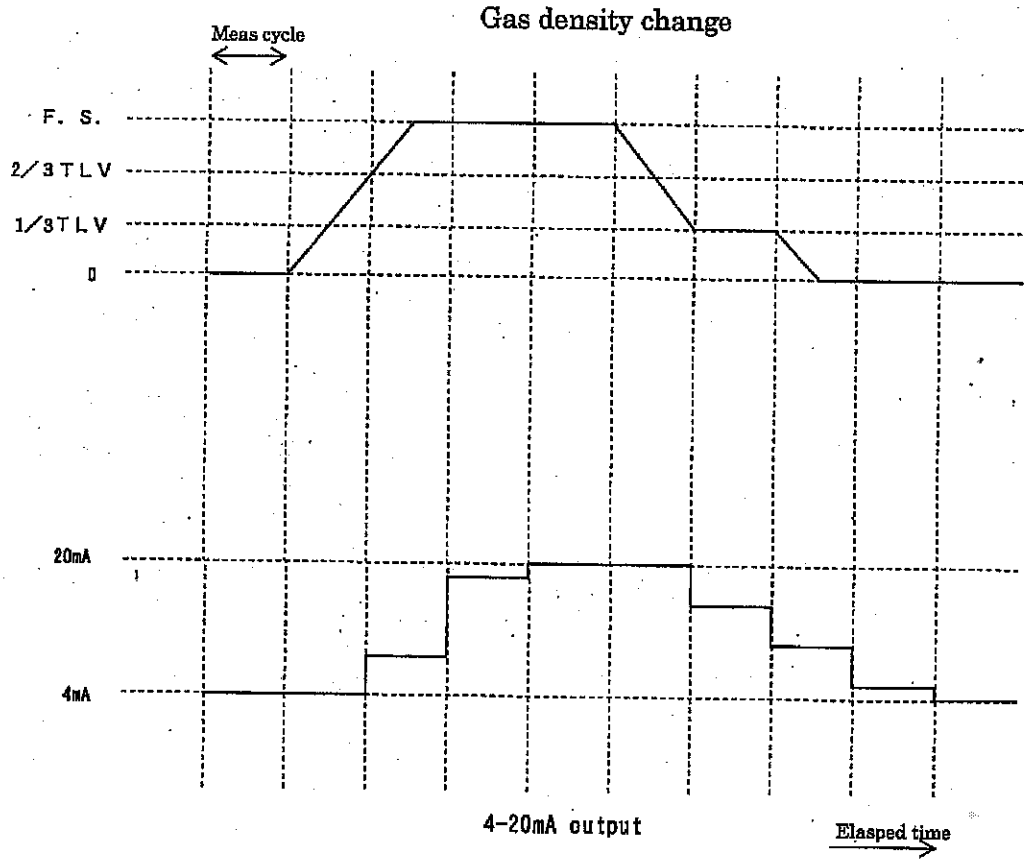

5-3-3 Output performance

Output : 4－20mA output
Resistive load : Below 300Ω

4mA	Gas density reading 0
20mA	F.S.
22mA	Gas density exceeding F.S.
0.5 mA	Trouble alarm
2.5 mA	Elasped time up to gas detection from power on at initial and maintenance time

6. Maintenance check

6-1 Daily check

Proceed to the following daily check procedure to maintain the function.

① Check the remainder of cassette tape.
- Check it by the remainder display 〔 TAPE VALID ...D 〕 on the lower of front panel.
- When the cassette tape is at prime time of replacement, replace it to follow the 【6－4 Cassette tape replacement method】.

② Check that the sample gas flow is within the red range.
- When require flow adjustment, see 【6－3 Flow adjustment of sample gas】 for adjustment.

③ Check that there is no trouble alarm.
- When the trouble alarm goes out, see 【7－2 Trouble cause and measures】 and make resetting work.

6-2 Regular maintenance check

6 months maintenance contract is recommended to use this unit for longer.

6-3 Flow adjustment of sample gas

The flow adjustment of sample gas shall proceed to the following.

① Check that this unit is under operating condition.

> **＊Note**
>
> When gas is short, it will show the message 〔 FAIL = FLOW 〕 but proceed to the next.

② Check that the red ball in the flow monitor is within the range.

The red ball may goes up/down from the center between two red lines by the pipe load and cassette tape feeding. If it is within the center, it is no problem nor influence.
If it is deviated from the red line, it must be adjusted in the center by turning △▽ flow adjuster.

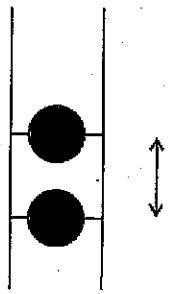

The red ball of flow monitor shall be in the center position between two red line.

6－4 Replacement of cassette tape

This cassette tape replacement shall be carried out as below.

① Check that this unit is under detection condition.
② Hold and press EJECT key for about 2～3 sec on the front panel and open the cassette tape. At this time, the buzzer sounds for 4 times.

③ Remove the cassette tape used up.
④ Put in the new tape not to be in wrong position by checking the tape model. If the position is wrong, it cannot be put in. Do not force to put in. Then, the cassette model name is displayed in the LCD while tray is open.

⑥ Press the SET PUSH of cassette tray, close it.
- This will return to an automatic detection condition by closing the cassette tray.
- It will take about 1 minute for self-diagnosis until the detection starts.

⑦ Check the sample gas flow rate. If deviated, adjust it.
When required to adjust, see 【6－3 sample gas flow rate】.

6-5 Alarm test

The alarm test shall be made in the following procedure.

① Check that this is in the detection condition.
② Hold and press MODE key for about 3 sec.
- Select Alarm test by △ key or▽ key and press BZ STOP key.
- Display [ALARM TEST] on LCD and the reading will increase every 1 digit while pressure △ key.
  Whenever exceed the preset alarm level, it triggers alarm.
- At this time, no output contact works. If let the external output work, press BZ STOP key and LAMP RESET key simultaneously and start alarm test.

③ Release △ key.
- The gas density at display will stop.

④ Press ▽ key.
- Reading goes down every 1 digit.
- When the display returns to 0, it will return to the set screen automatically.

⑤ Hold and press MODE key for about 3 minutes and it will be to the detection mode.

6-6 LCD contrast adjustment

LCD contrast adjustment shall be made with the following procedure.

① Check that this is under detection condition.
② Hold and press MODE key for about 3 sec.
③ Select △ key or ▽ key LCD CONTRAST and press BZ STOP key.
LCD CONTRAST is displayed on LCD and whenever the density is press, the contrast will be thicker by pressing △ key and thinner by pressing ▽ key.

PH3 : 0ppb
L: 150 H: 300

PH3 : 0ppb
L: 150 H: 300

④ When press BZ STOP key at visible condition, the set is completed and returns to the set screen.
⑤ Hold and press MODE key for about 3 sec and it will return to the detection condition.

6－7 Recommended spare parts list

No.	Name	Frequency	Rep fre(year)	Q'ty/set
1	Pump(except diaphragm)	6 months	1～3	1
2	Diaphragm	6 months	1～2	1
3	Pump holder	1 year	3～6	1
4	Solenoid valve	———	5～8	1
5	Head	———	3～4	1 set
6	Inter pipe (Rubber)	6 months	1～3	1 set
7	Inter pipe (Teflon)	6 months	3～8	1 set
8	Elbow(F2)	6 months	1～3	5
9	Elbow	6 months	1～3	1
10	Filter holder (With O-ring)	1 year	3～6	1
11	Gear motor (Dec drive)	———	7～9	1
12	Gear motor (Tape winding)	———	7～9	1
13	Switching regulator	———	6～8	1
14	Main PCB	———	7～8	1
15	Switching PCB(LCD)	1 year	7～8	1
16	Fuse (2A)	———	8	2
17	Flowmeter	1 year	7～8	1
18	Inter filter (Balston)	———	3～5	1
19	Ex dust filter	6 months	0.5～1	1

7. Trouble case treatment

7-1 Self-diagnosis

Each diagnosis function in this unit is provided.
If trouble was found, the following message is shown and make the recovery procedure.

Self-diagnosis	LCD message	POWER/TROUBLE lamp	Alarm contact
Sensor failure	FAIL = SENSOR	Blinking	Alarm status
Low flow	FAIL = FLOW	Blinking	Alarm status
Tape damage	FAIL = TAPE	Blinking	Alarm status
Tap cassette pre-caution	CHANGE TAPE	Blinking	Normal status
Tape ending	TAPE END	Blinking	Alarm status
Tape fails	FAIL = TAPE LEVEL	Blinking	Alarm status
Tape set fails	TAPE SET MISS	Blinking	Alarm status
System trouble	FAIL = SYSTEM	Blinking	Alarm status
Motor trouble	FAIL = MOTOR	Blinking	Alarm status

*** Note**

When encounter some troubles, [→] on the right of LCD will blink and when press [LAMP RESET] switch, another trouble mark will show another trouble.

7-2 Trouble cause and measures

Trouble content	Main cause	Counter-measure
Sensor failure	Sensor disconnection or connector removal or output deterioration.	Sensor head is replaced by manufacturer.
	Measuring path(LED · sensor)part is extremely dirty.	Ditto
Low flow	Secular drop of pump or dust filth at flow path.	Adjusted by flow adjuster.
Tape breakage	Loading of tape cassette is not sure.	Make sure to set the new tape cassette.
	When load the cassette, it damaged the tape.	Ditto
Tape cassette change precaution	Nearly at tape ending.	Replace it with new tape cassette.
Tape ending	Tape ends	Replace it with new cassette.
Tape failure	It is when use the discolor tape than the regulated or the tape passing the life and that stored in the outside of refrigerator.	Replace it with new tape cassette.
Tape set failure	It is not to set the tape cassette. It may be some error of tape loading.	Load the tape cassette. Load it out and check the tape condition. If not in error, load it again.
System trouble	System trouble of instrument	Re-plug in the power. If it does not reset, contact the manufacturer.
Motor trouble	Trouble of gear motor	Contact manufacturer for repair.
Power cannot be on.	Power terminal is off.	Connect it to the terminal firmly.
	Fuse is disconnected. Or not connected.	Put in the rating fuse.
	No voltage is supplied.	Check the power voltage supply.